# JAIPUR

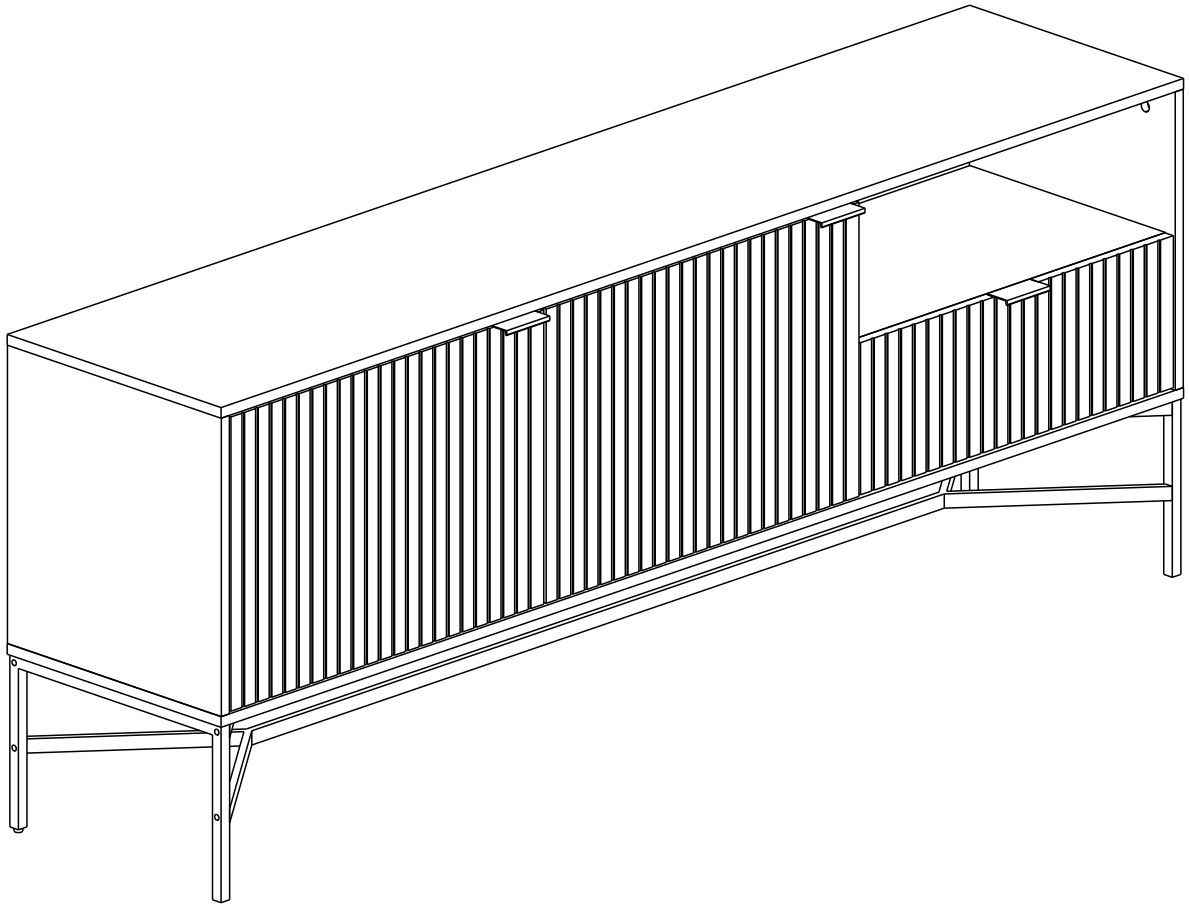

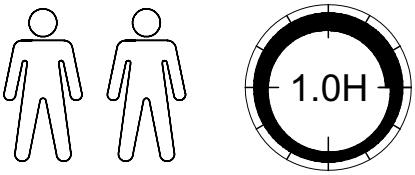


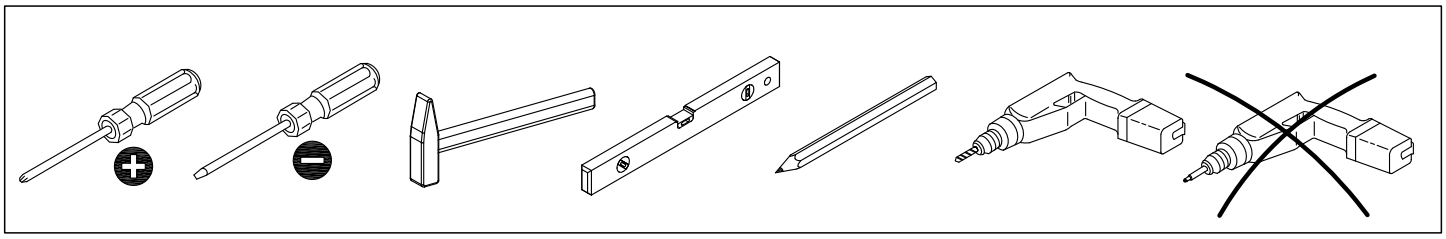

29/12/2021

| | | | √ |
|---|---|---|---|
| 1 | 1 | 1800x400x15mm | |
| 2 | 1 | 1800x400x15mm | |
| 3 | 1 | 400x420x15 mm | |
| 4 | 1 | 381x420x15 mm | |
| 5 | 1 | 381x420x15 mm | |
| 6 | 1 | 400x420x15 mm | |
| 7 | 2 | 578.5x365x15mm | |
| 8 | 1 | 580x365x15mm | |
| 9 | 2 | 590x430x4mm | |
| 10 | 1 | 590x430x4mm | |
| 11 | 2 | 585x414x16mm | |

| | | | √ |
|---|---|---|---|
| 12 | 1 | 585x214x16 mm | |
| 13 | 1 | 340x118x12 mm | |
| 14 | 1 | 340x118x12 mm | |
| 15 | 1 | 536x118x12 mm | |
| 16 | 1 | 546x338x4 mm | |
| 17 | 1 | 395x252x16 mm | |
| 18 | 1 | 395x252x16 mm | |
| 19 | 1 | 1763x392x20 mm | |
| 20 | 1 | 1763x392x20 mm | |
| 21 | 1 | 1455x30x20 mm | |

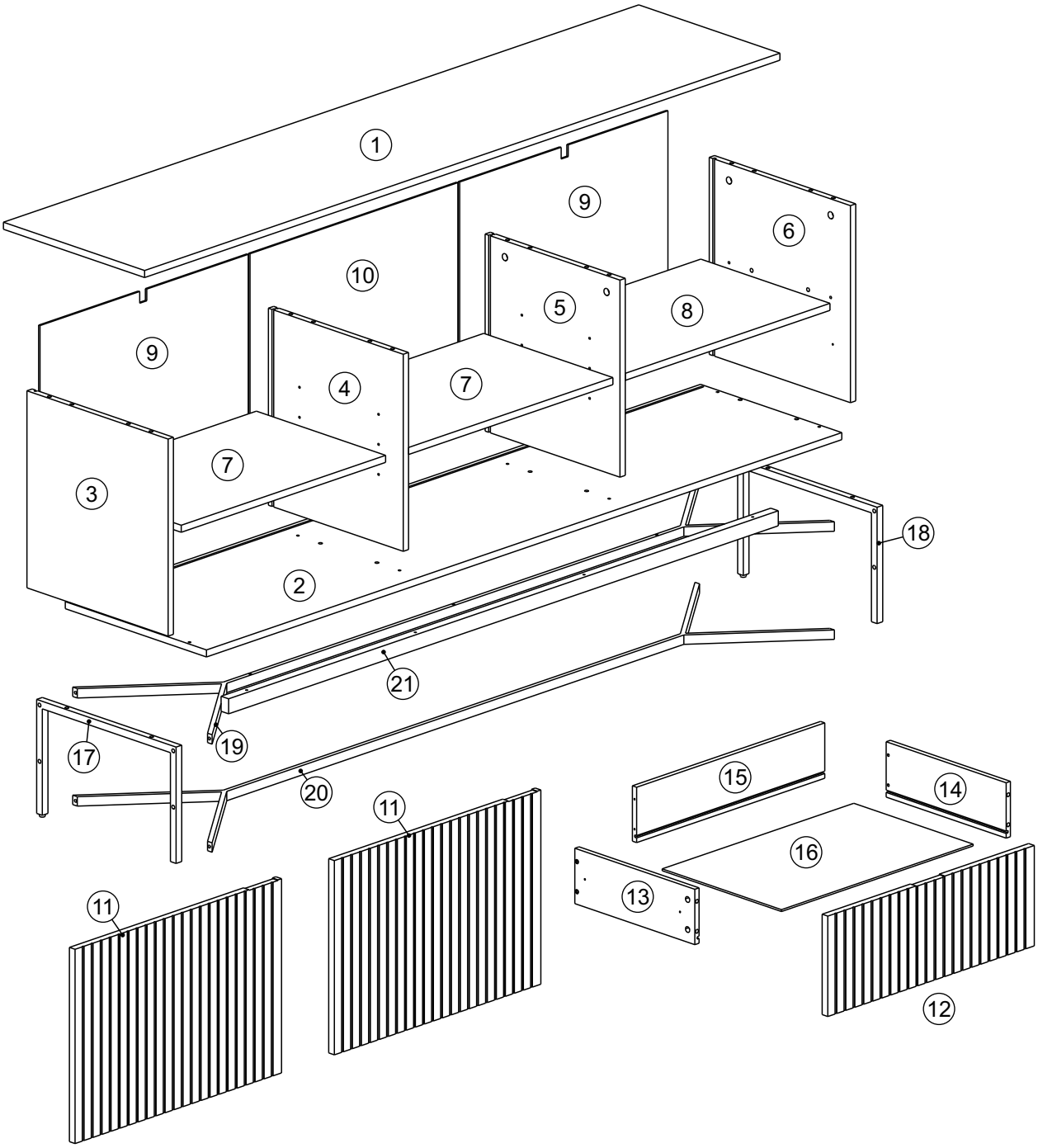

| | | | | |
|---|---|---|---|---|
| A x 2<br>340mm | B x 4<br>Ø35/FK17mm | C x 14<br>Ø3.5x12mm | D x 16<br>Ø5x16mm | E x 12<br>Ø6x45mm |
| F x 12<br>Ø15x12mm | G x 20<br>Ø8x30mm | H x 8<br>Ø5x45mm | J x 8<br>15x13x10mm | K x 8<br>Ø3.5x20mm |
| L x 8<br>M6x22mm | M x 4<br>M6x30mm | N x 3<br>Ø4x30mm | P x 4<br>Ø6x27mm | Q x 4<br>Ø12x10mm |
| R x 4<br>Ø4x35mm | S x 4<br>Ø4x40mm | T x 3<br>80x38x19mm | U x 8<br>Ø5/Ø5mm | V x 2 |
| W x 4<br>Ø4x14mm | X x 6<br>Ø4/Ø13mm | Y x 1<br>4mm | Z x 1<br>3mm | AA x 12<br>Ø21mm |

1

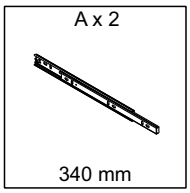


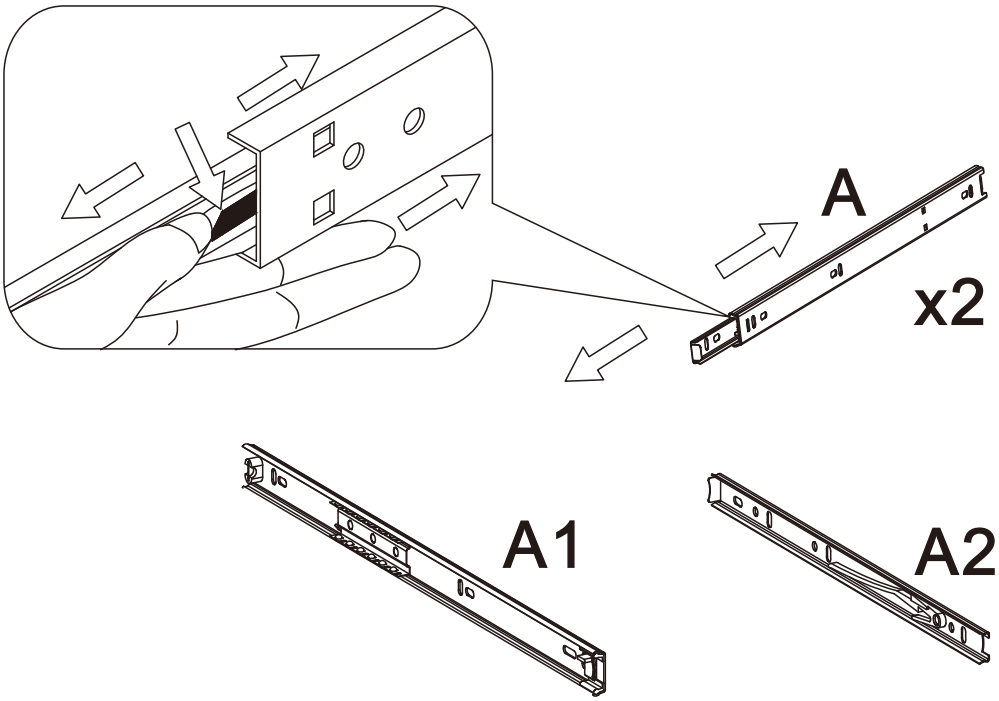

# 2

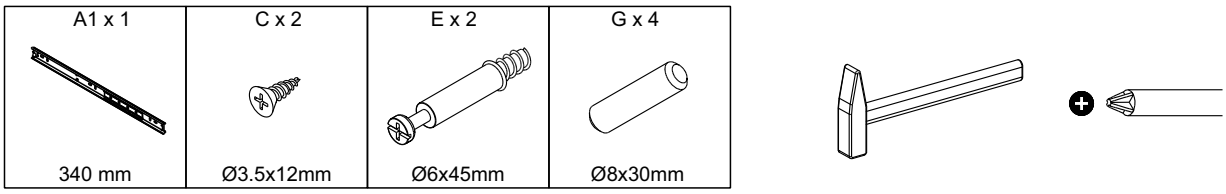
A1 x 1
340 mm
C x 2
Ø3.5x12mm
E x 2
Ø6x45mm
G x 4
Ø8x30mm

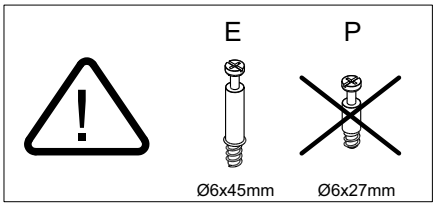
E
P
Ø6x45mm
Ø6x27mm

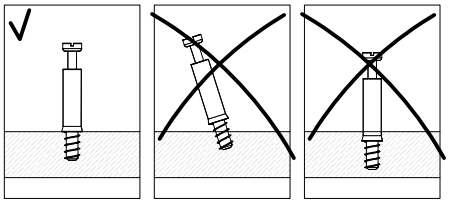

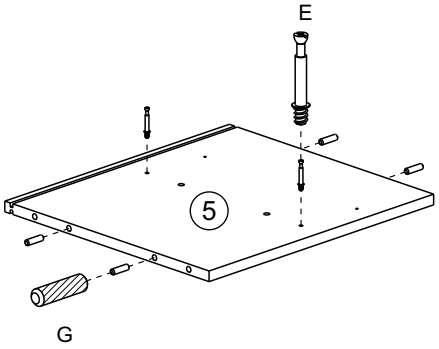
E
5
G

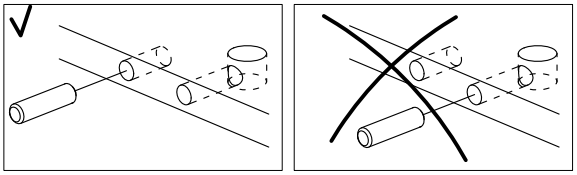

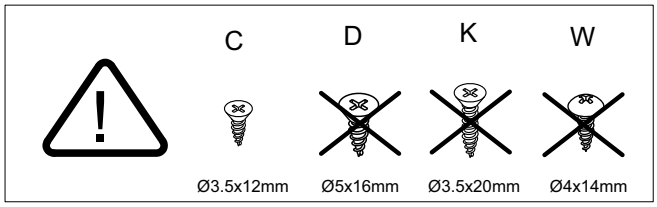
C
D
K
W
Ø3.5x12mm
Ø5x16mm
Ø3.5x20mm
Ø4x14mm

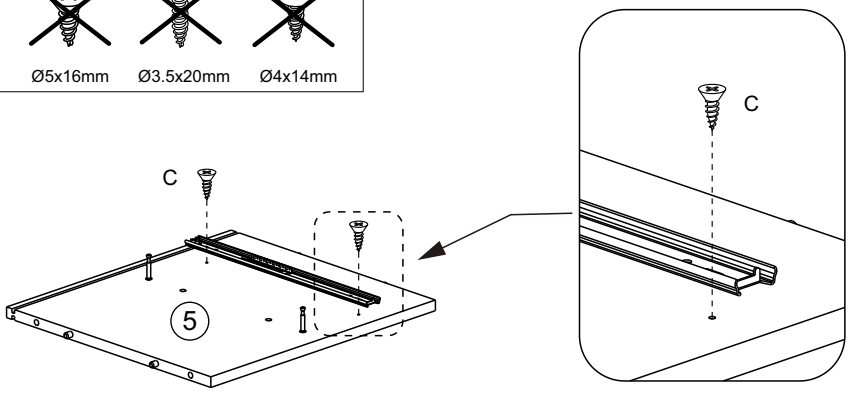
C
5
C

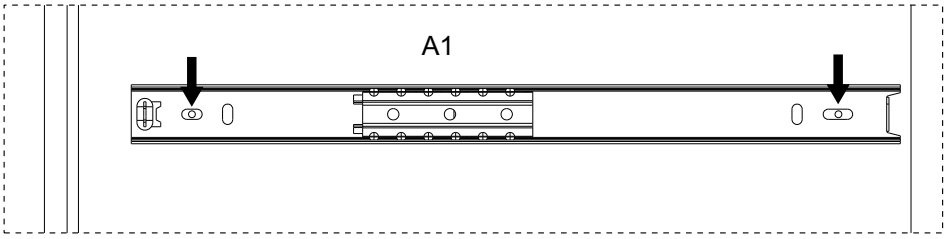
A1

# 3

| A1 x 1 | C x 2 | E x 2 | G x 4 |
|---|---|---|---|
| 340 mm | Ø3.5x12mm | Ø6x45mm | Ø8x30mm |

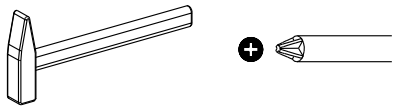

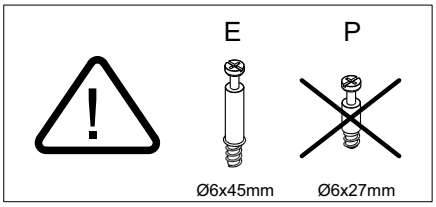


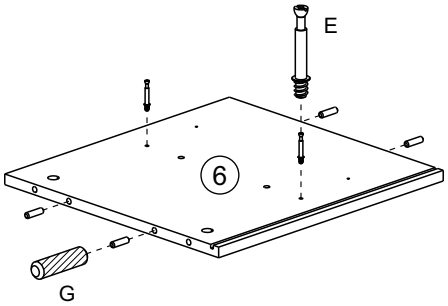


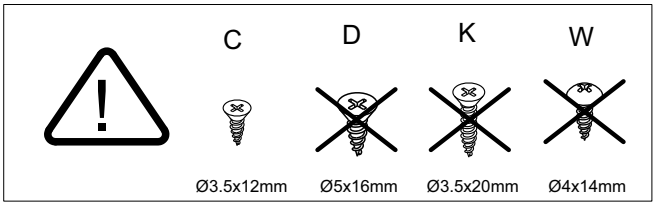


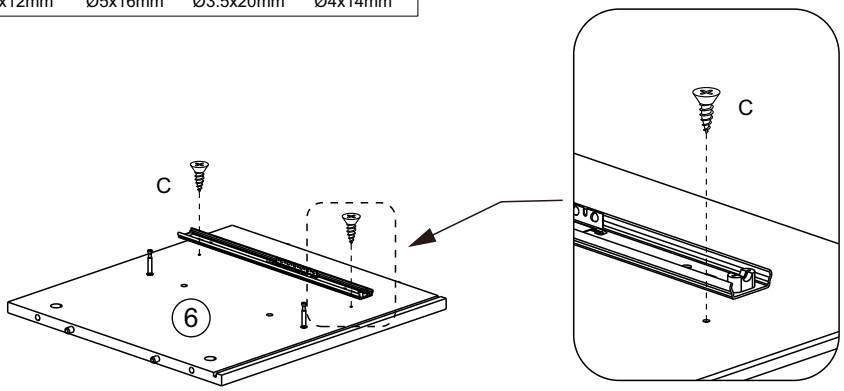


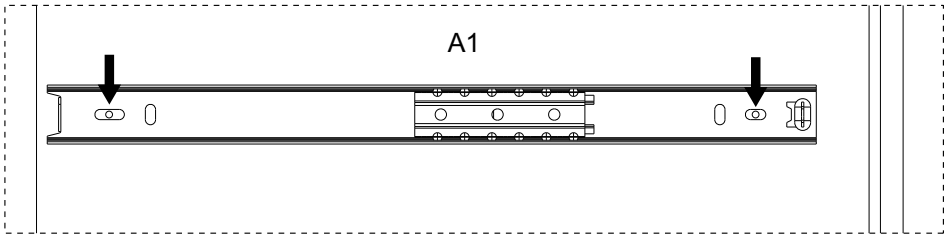

# 4

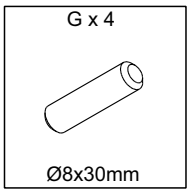


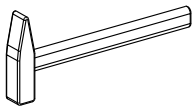

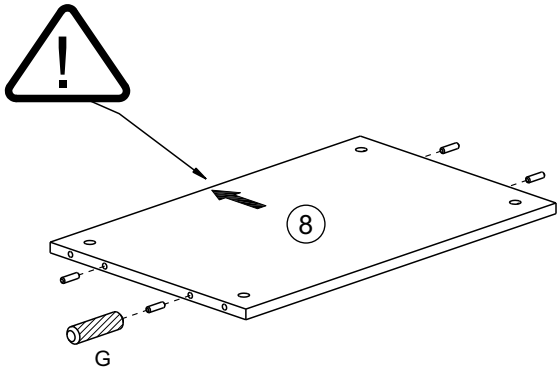


# 5

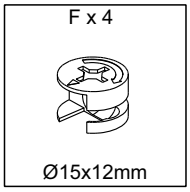


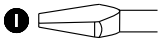

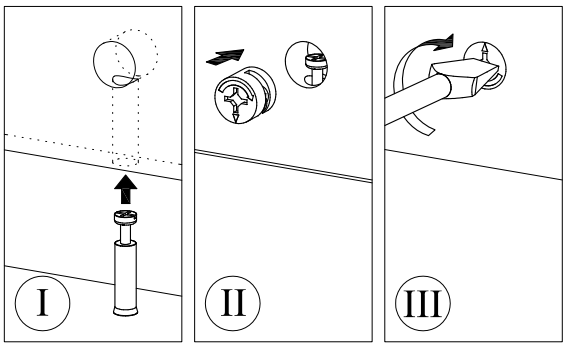


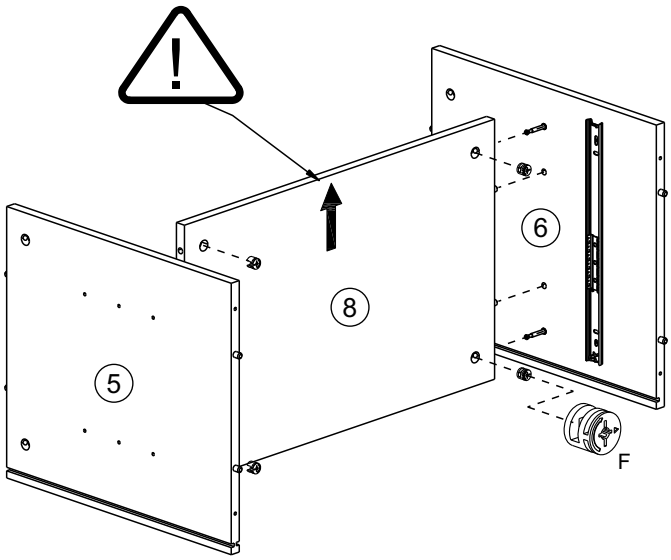

# 6

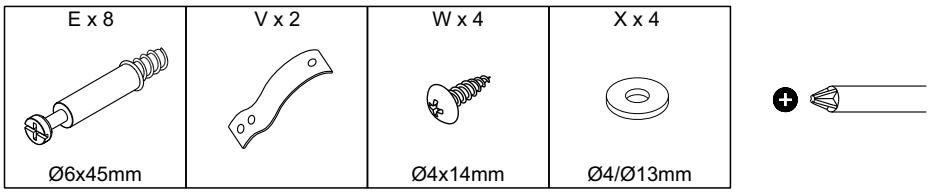
E x 8
Ø6x45mm
V x 2
W x 4
Ø4x14mm
X x 4
Ø4/Ø13mm

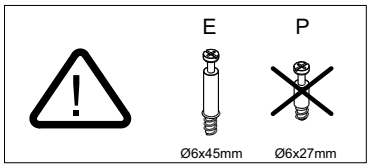
E
P
Ø6x45mm
Ø6x27mm

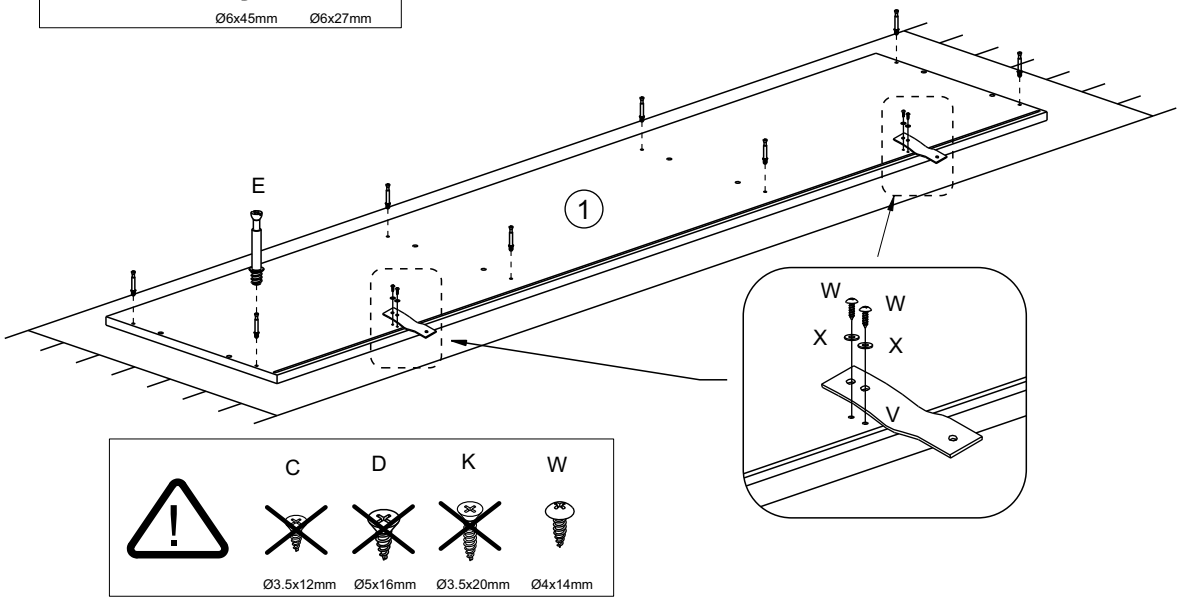
E
1
W
W
X
X
V
C
D
K
W
Ø3.5x12mm
Ø5x16mm
Ø3.5x20mm
Ø4x14mm

# 7

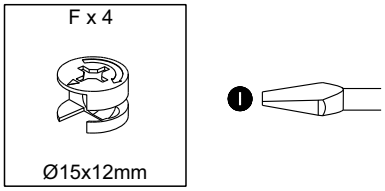
F x 4
Ø15x12mm

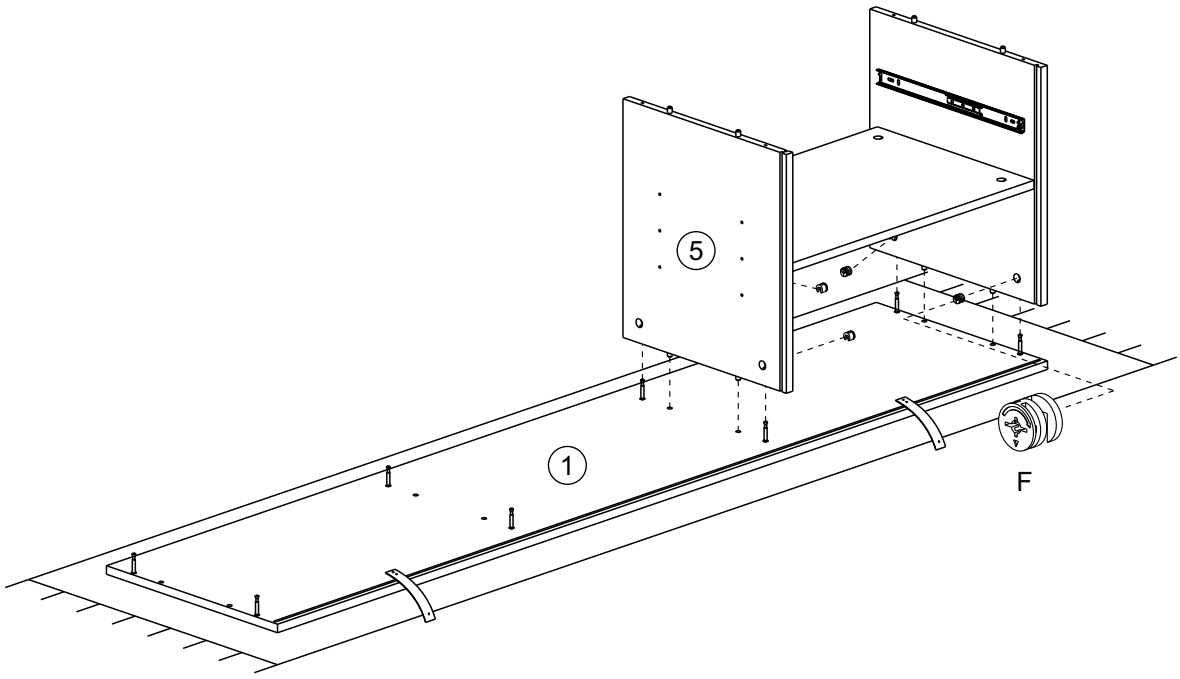
5
1
F

# 8

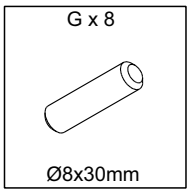


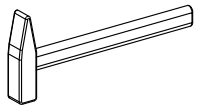

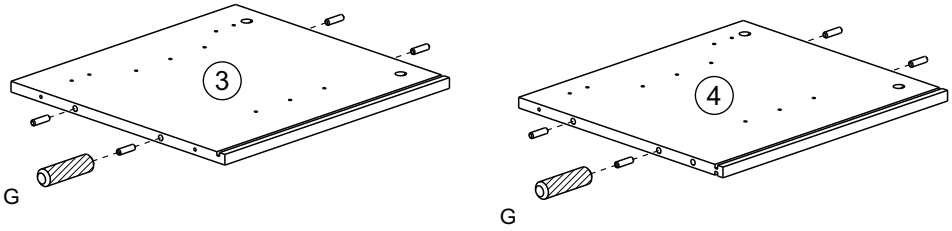


# 9

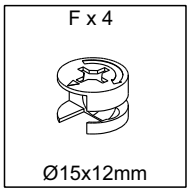


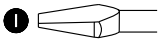

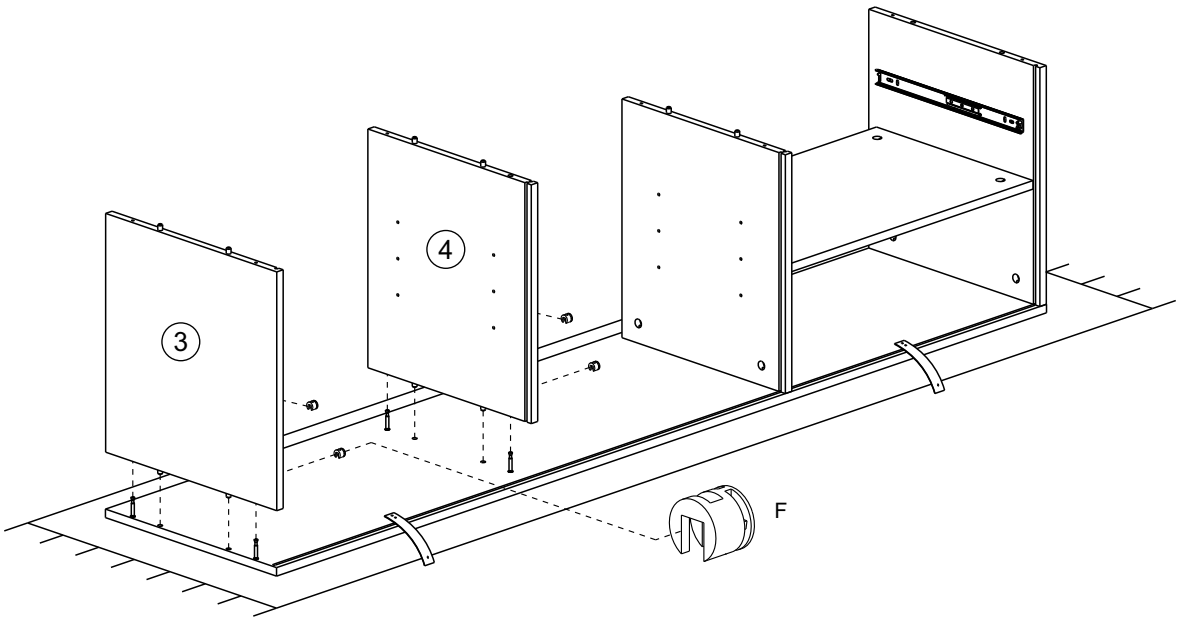

# 10

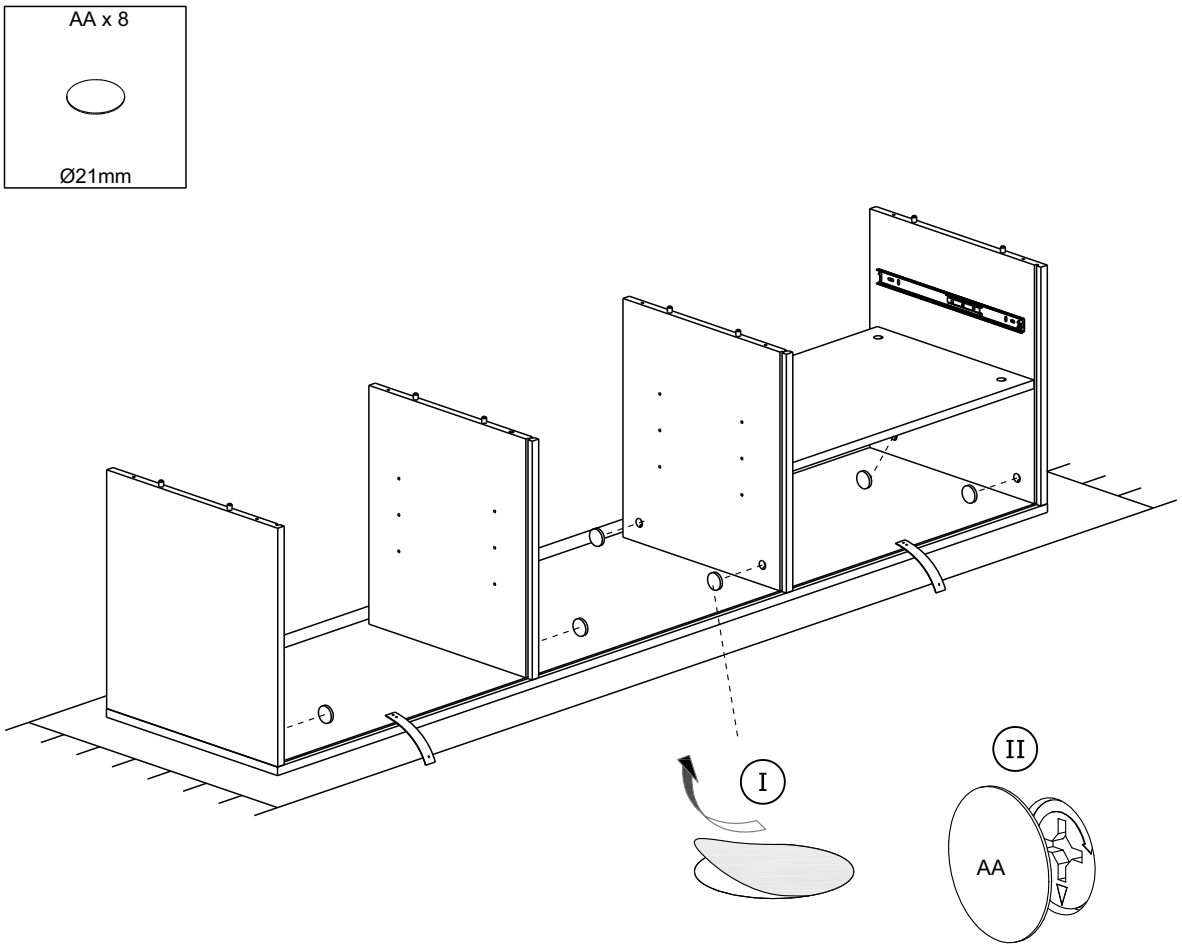


# 11

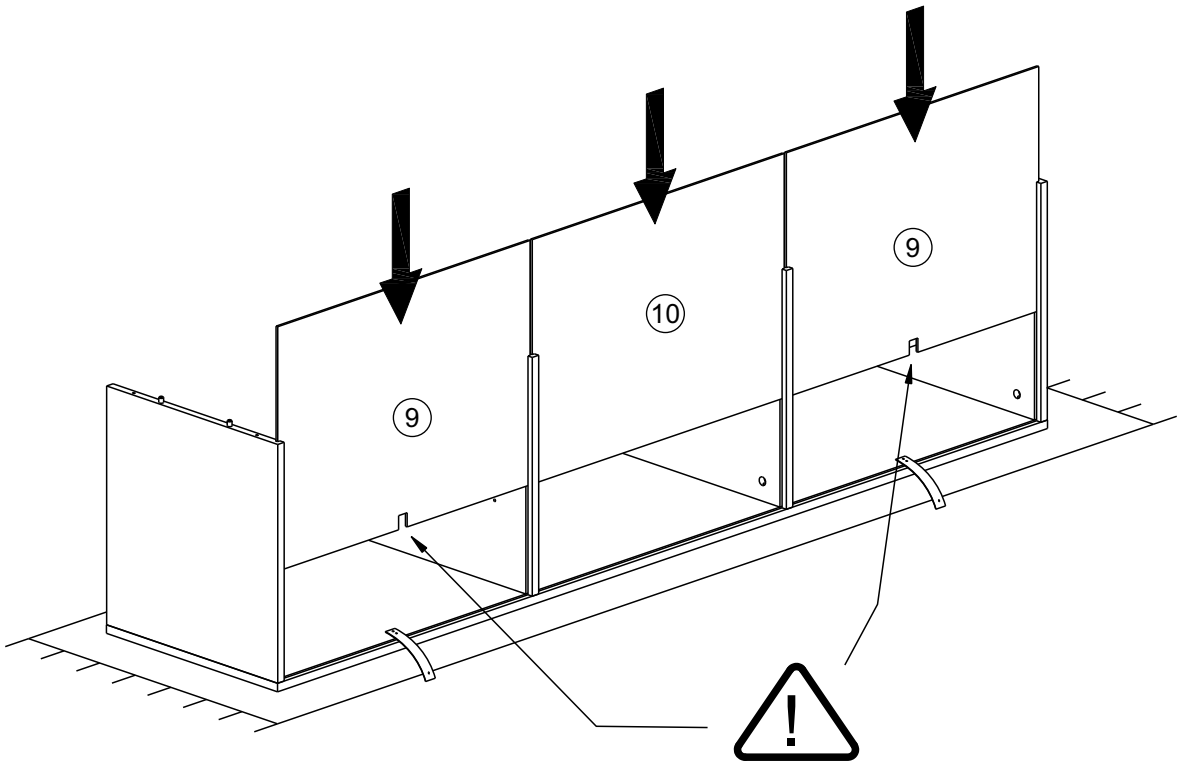

# 12

| H x 8 | Z x 1 |
|---|---|
| Ø5x45mm | 3mm |

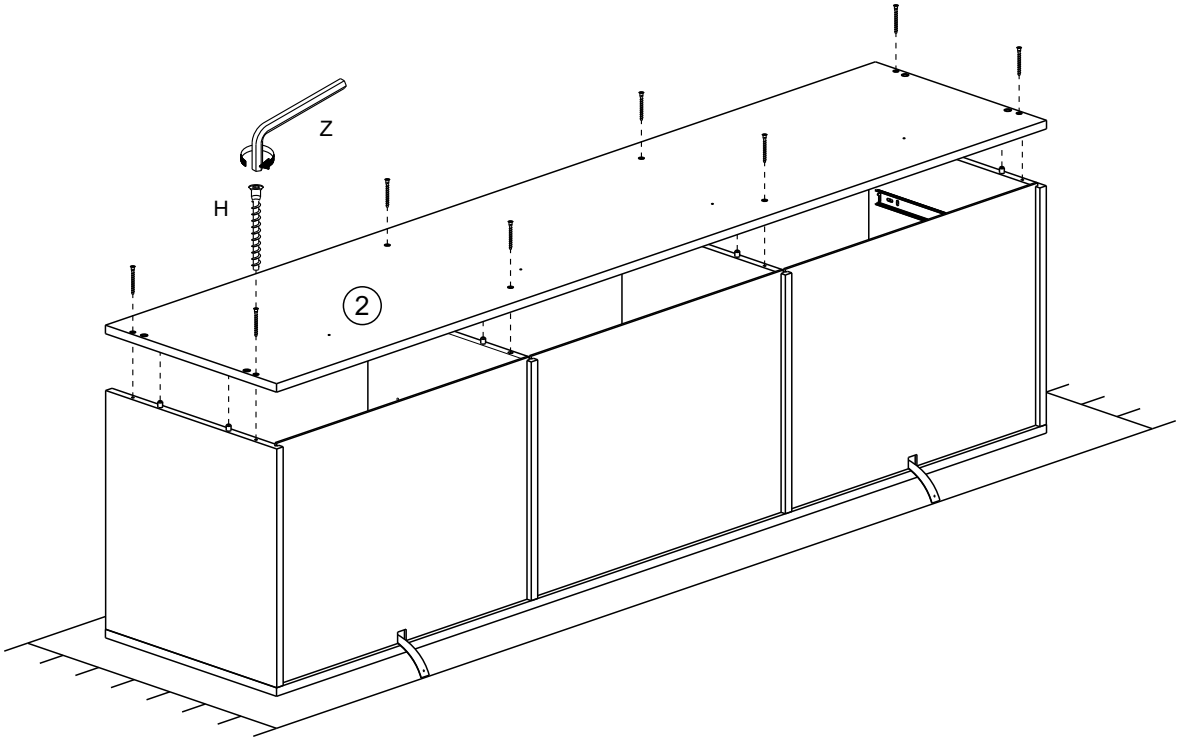


# 13

| J x 8 | K x 8 |
|---|---|
| 15x13x10mm | Ø3.5x20mm |

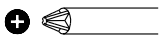

XX=YY

| | C | D | K |
|---|---|---|---|
| | Ø3.5x12mm | Ø5x16mm | Ø3.5x20mm |

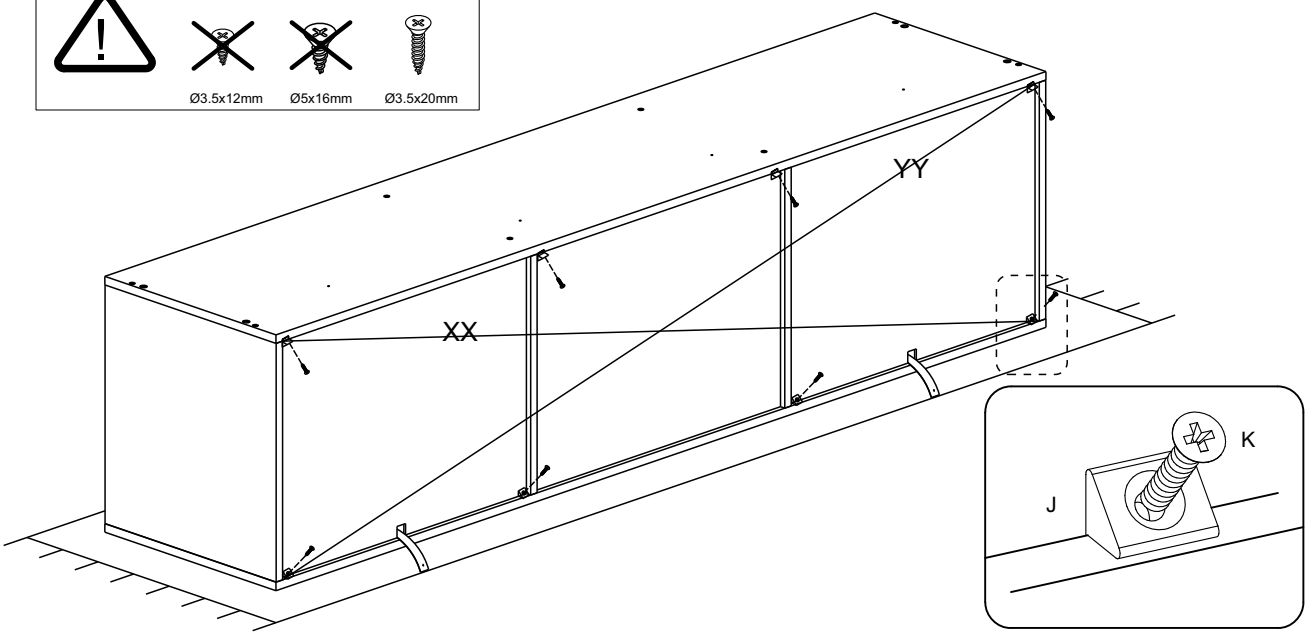

# 14

| L x 4 | Y x 1 |
|---|---|
| | |
| M6x22mm | 4mm |

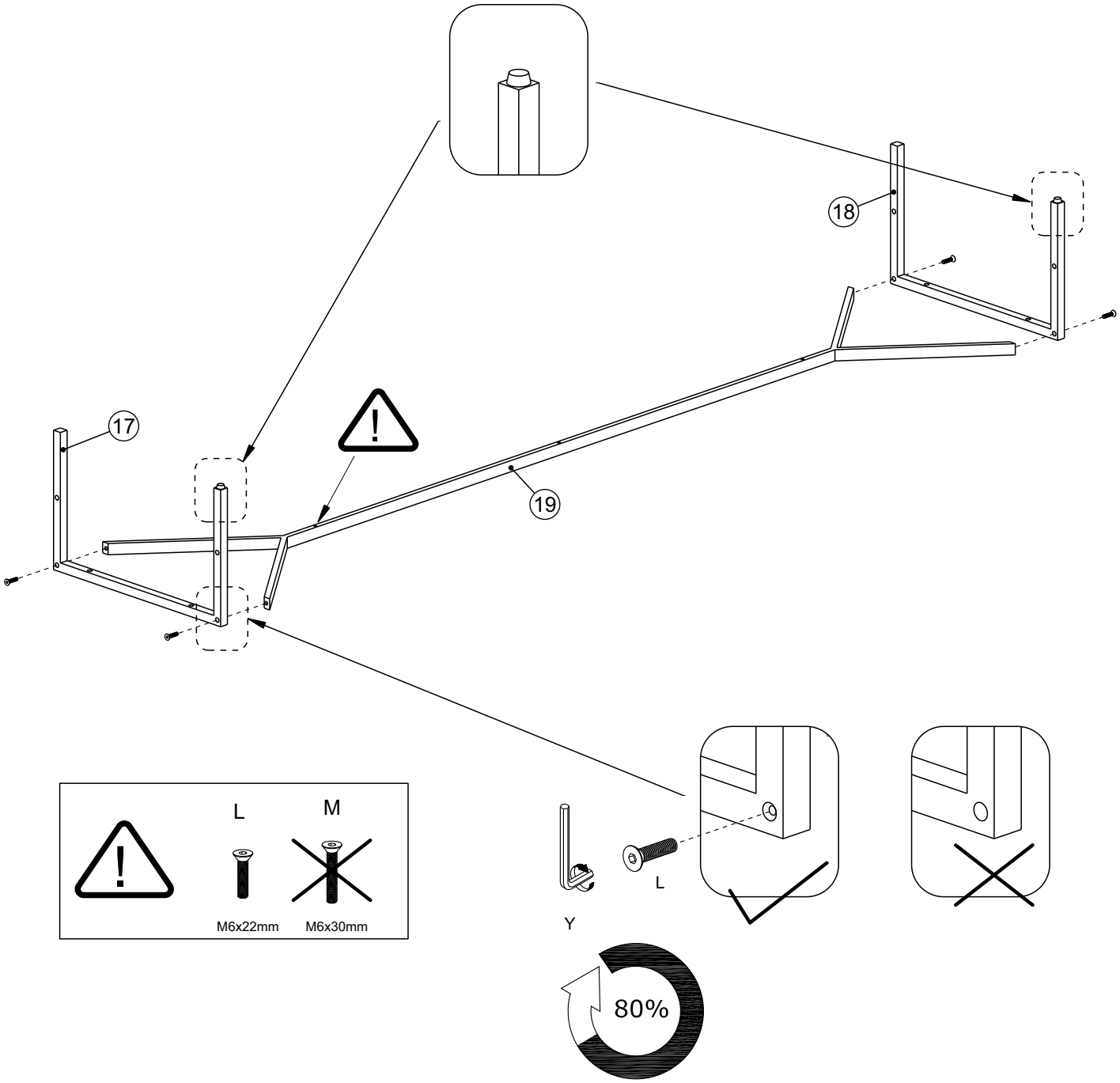

# 15

| M x 4 | Y x 1 |
|---|---|
| M6x30mm | 4mm |

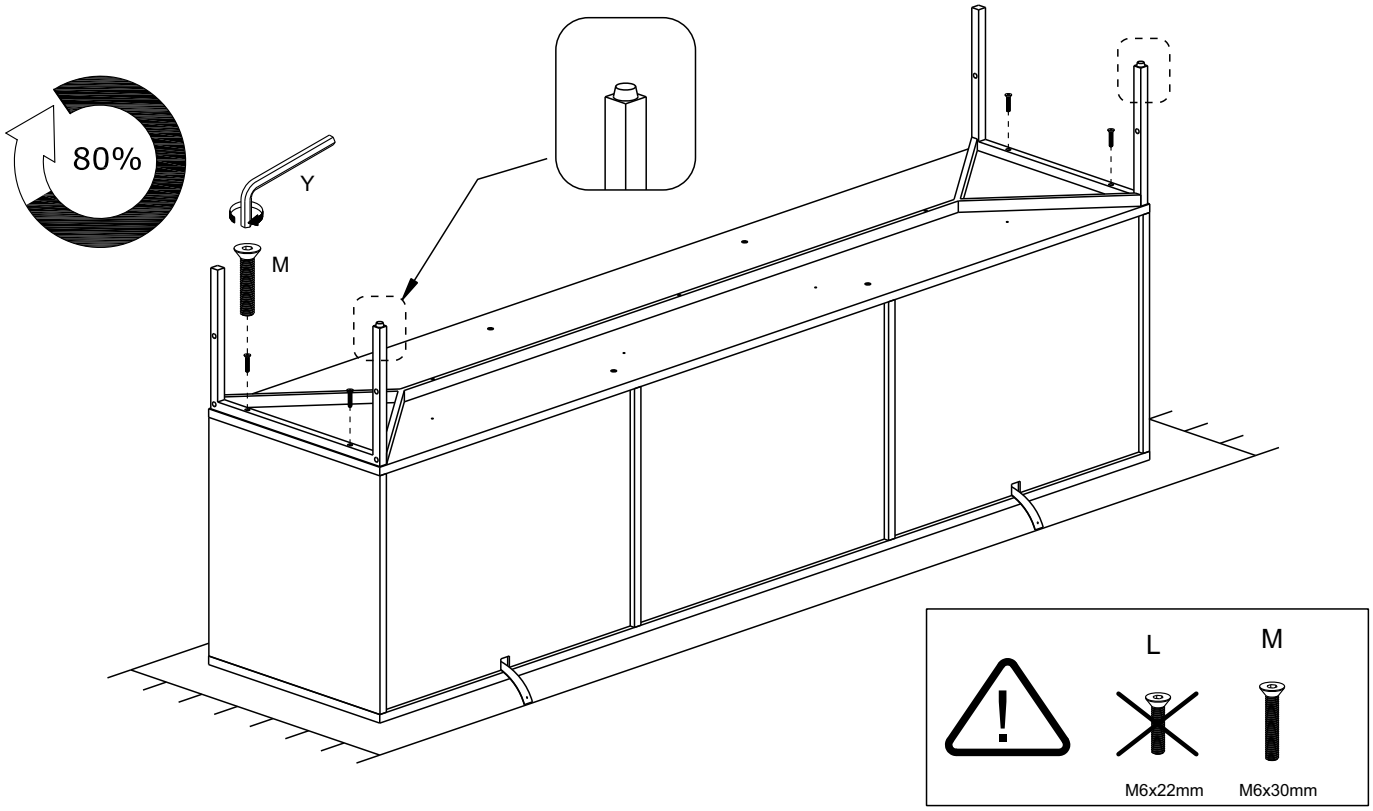


# 16

| N x 3 |
|---|
| Ø4x30mm |

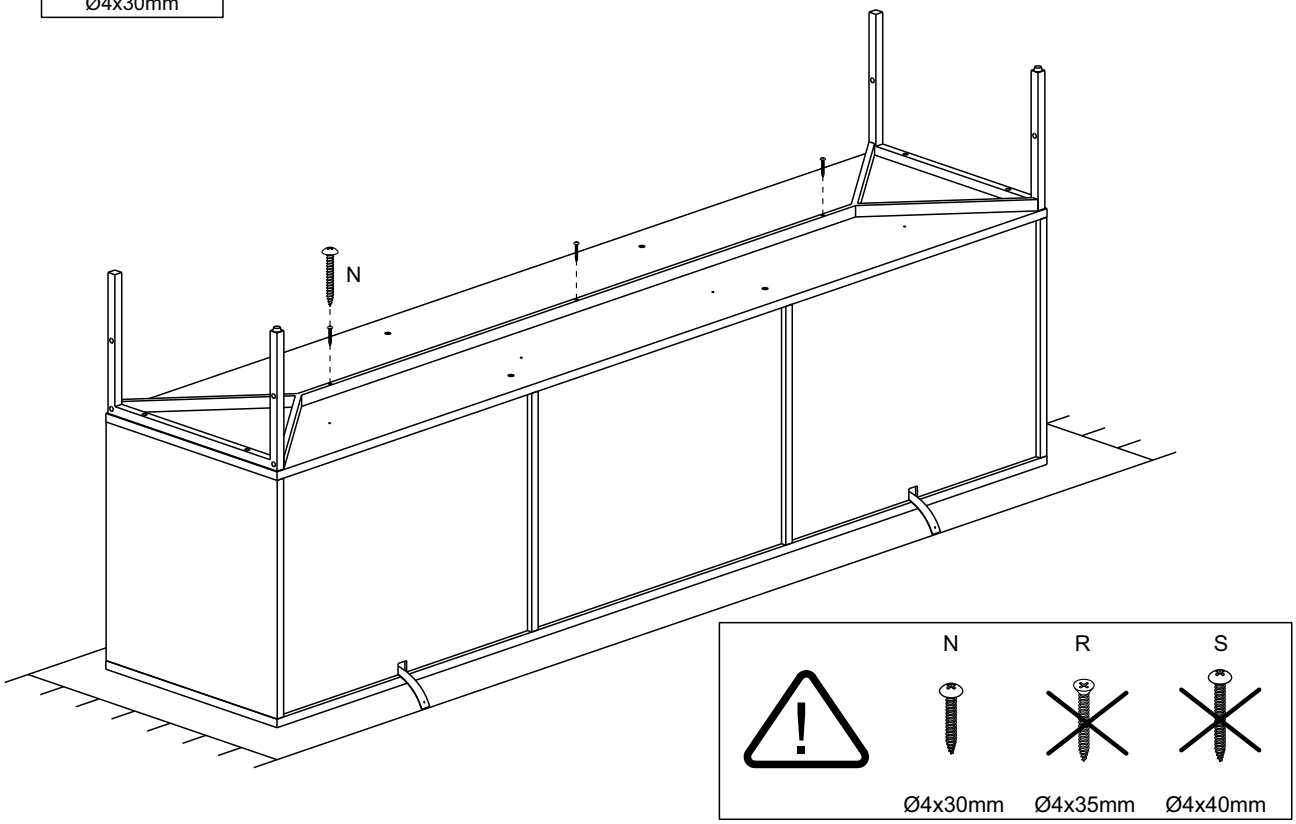

# 17

| L x 4 | Y x 1 |
|---|---|
| | |
| M6 x 22 mm | 4mm |

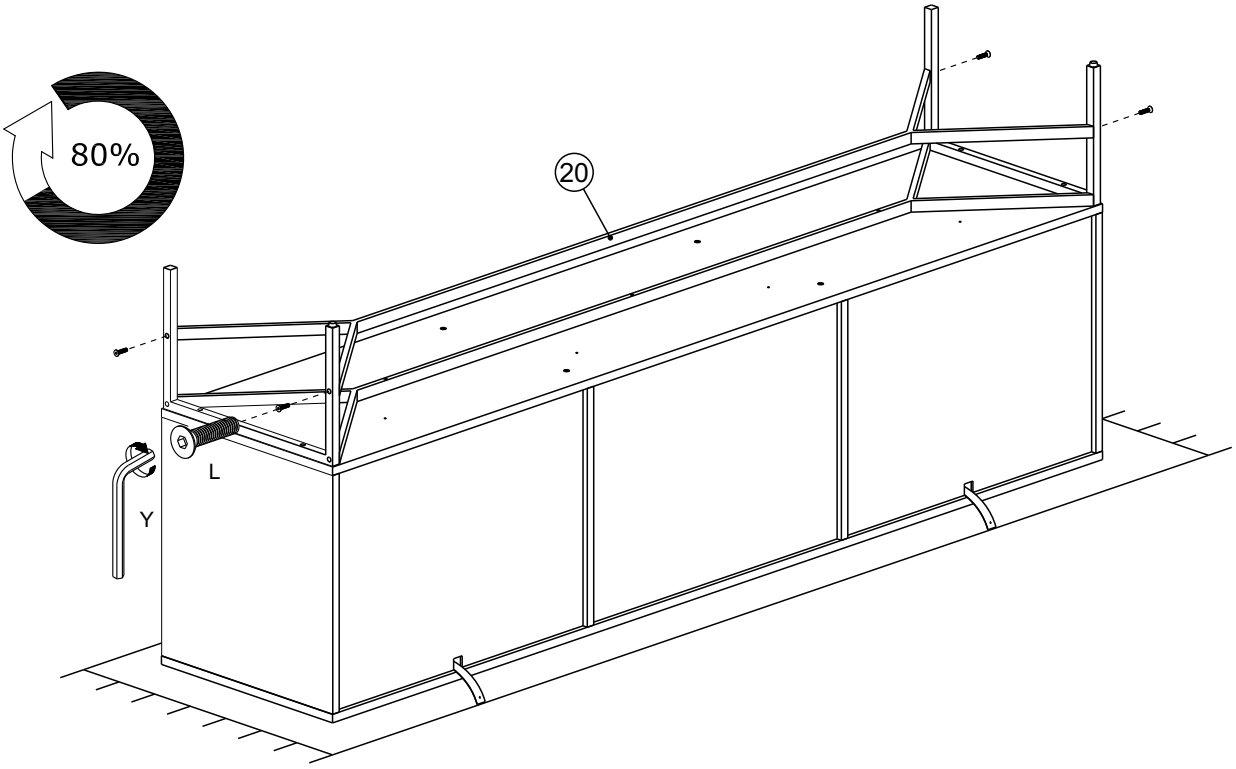


# 18

| Y x 1 |
|---|
| |
| 4mm |

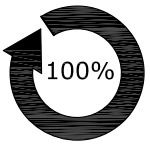


Lx8

Mx4

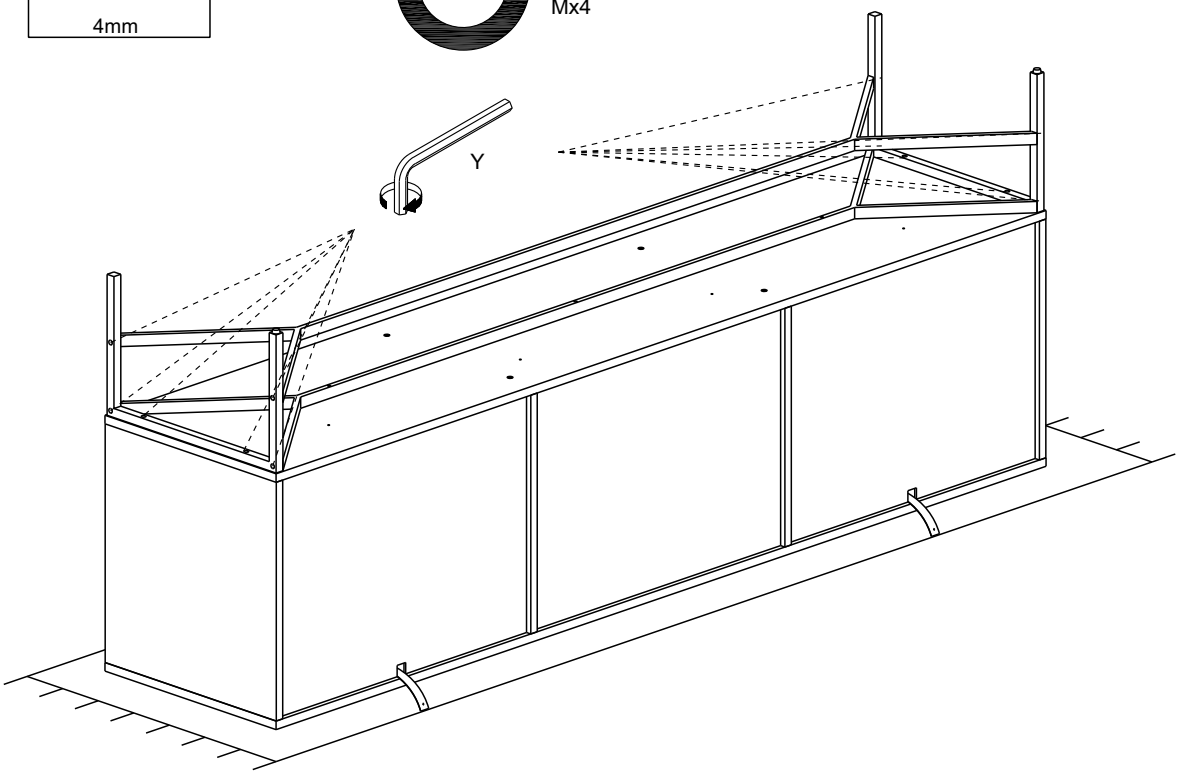

# 19

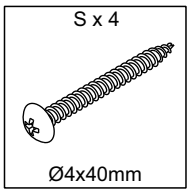

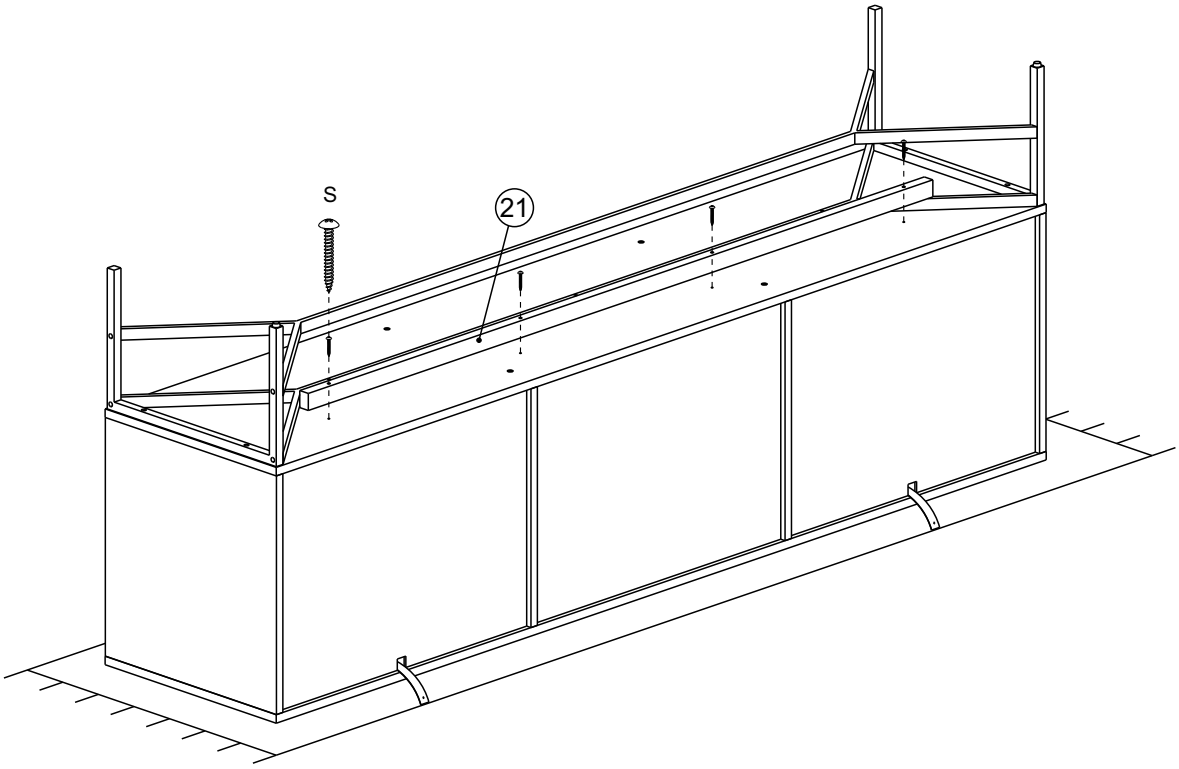


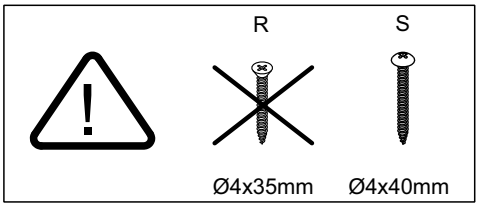

# 20

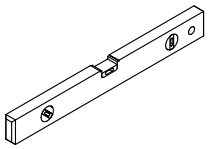

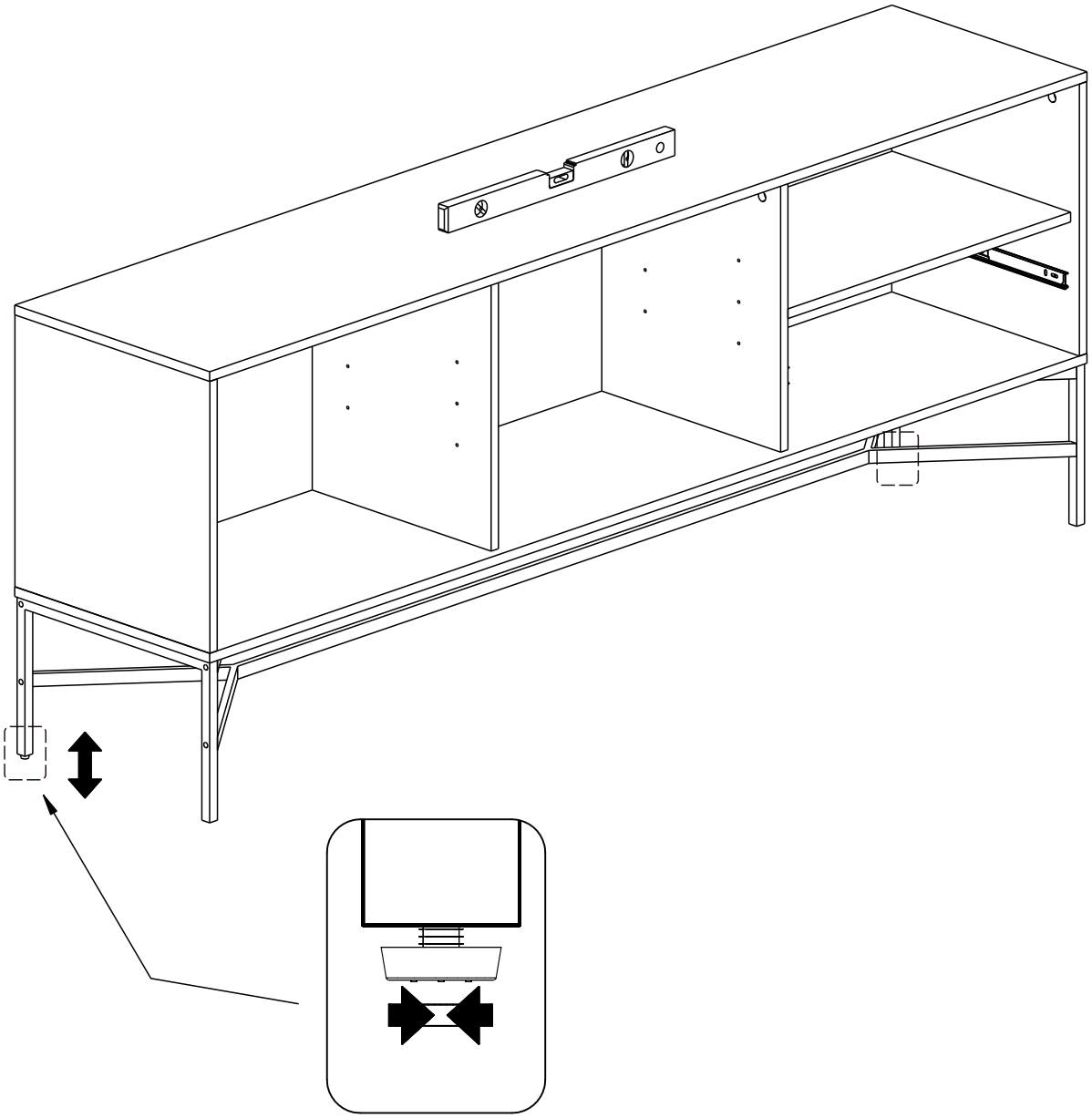

# 21

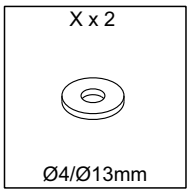


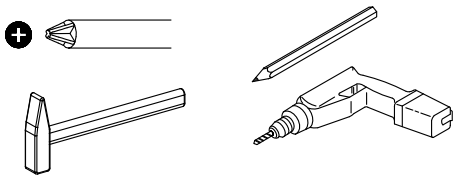

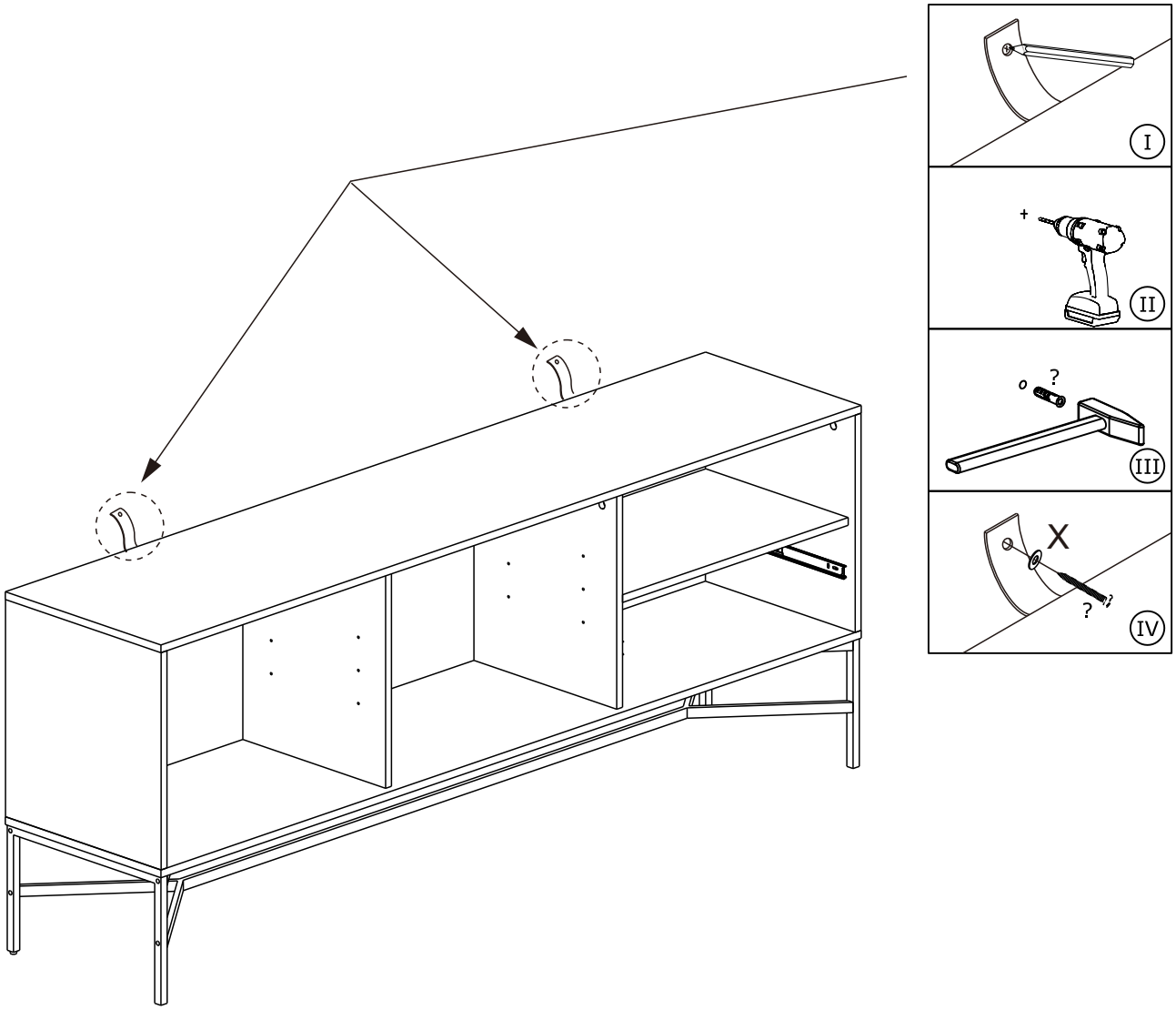

# 22

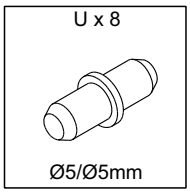
U x 8
Ø5/Ø5mm

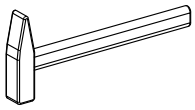

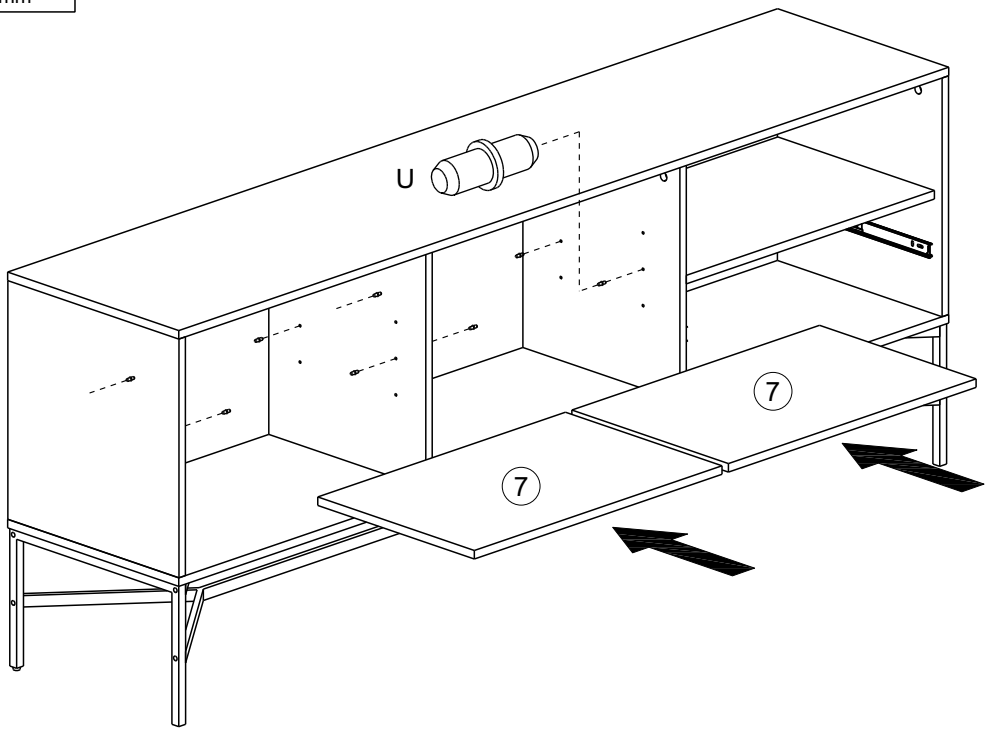
U
7
7

# 23

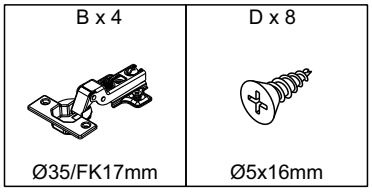
B x 4
Ø35/FK17mm
D x 8
Ø5x16mm

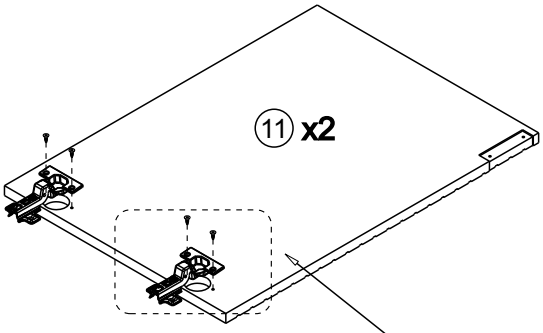
11 x2

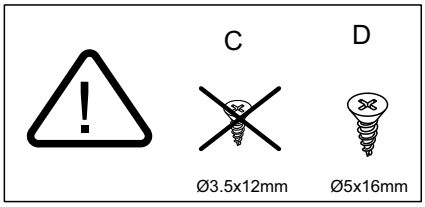
C
D
Ø3.5x12mm
Ø5x16mm

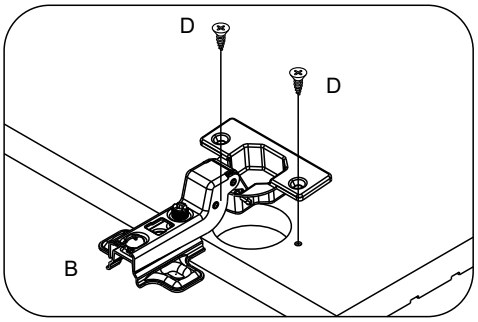
D
D
B

# 24

| C x 4 | D x 8 | T x 2 |
|---|---|---|
| Ø3.5x12mm | Ø5x16mm | 80x38x19mm |

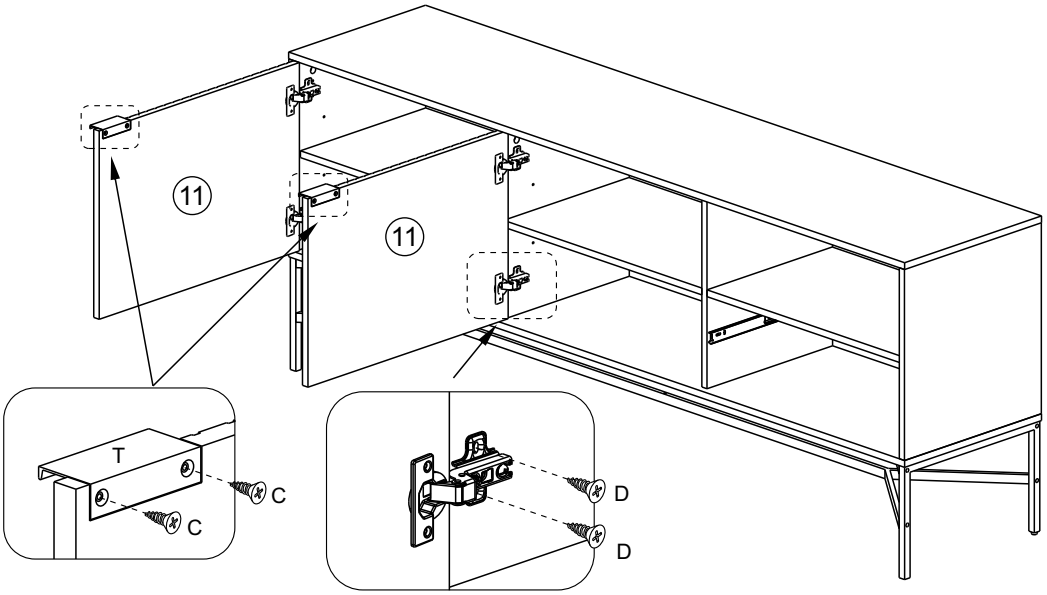


| C | D |
|---|---|
| Ø3.5x12mm | Ø5x16mm |

# 25

| P x 4 |
|---|
| Ø6x27mm |

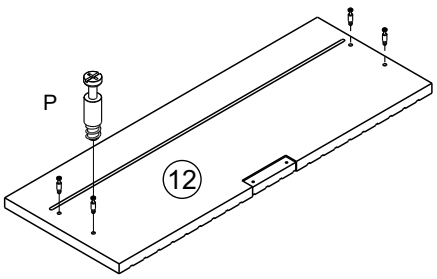

# 26

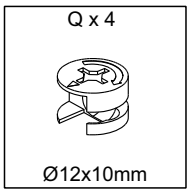


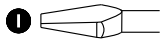


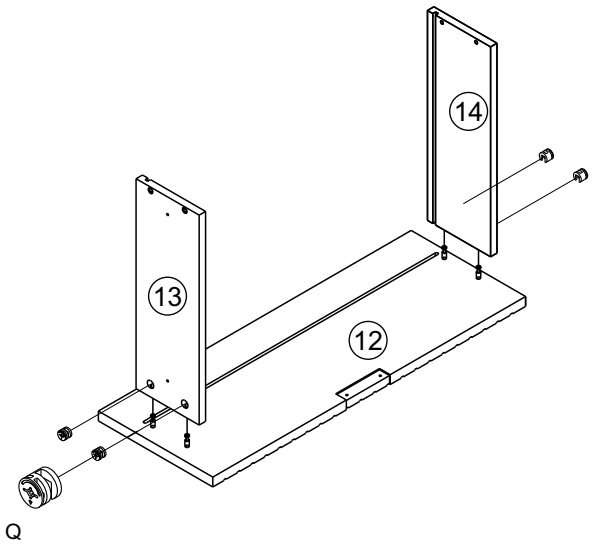


# 27

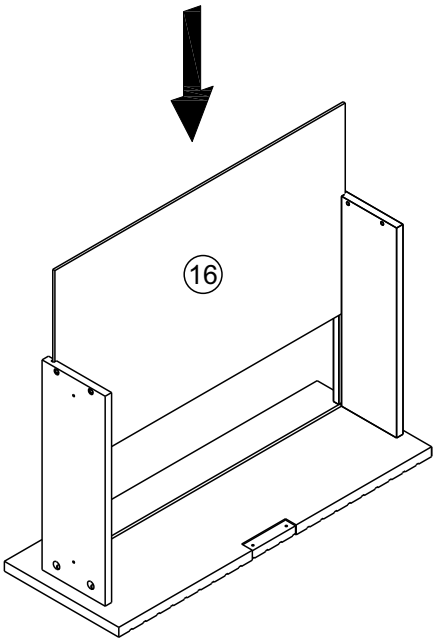

# 28

| R x 4 | AA x 4 |
|---|---|
| Ø4x35mm | Ø21mm |

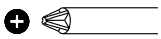

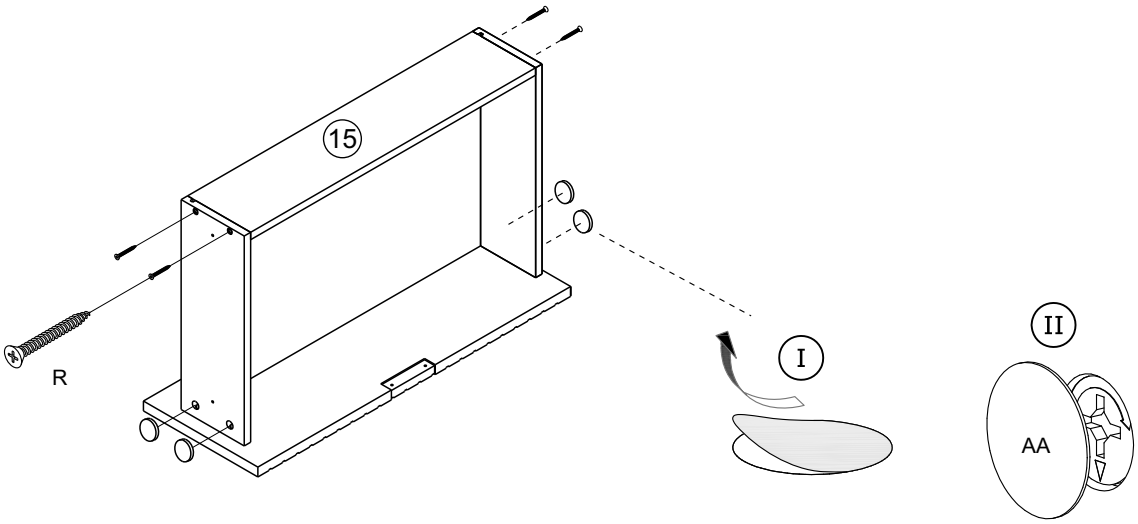


# 29

| A2 x 2 | C x 6 | T x 1 |
|---|---|---|
| 340 mm | Ø3.5x12mm | 80x38x19mm |

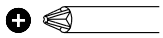

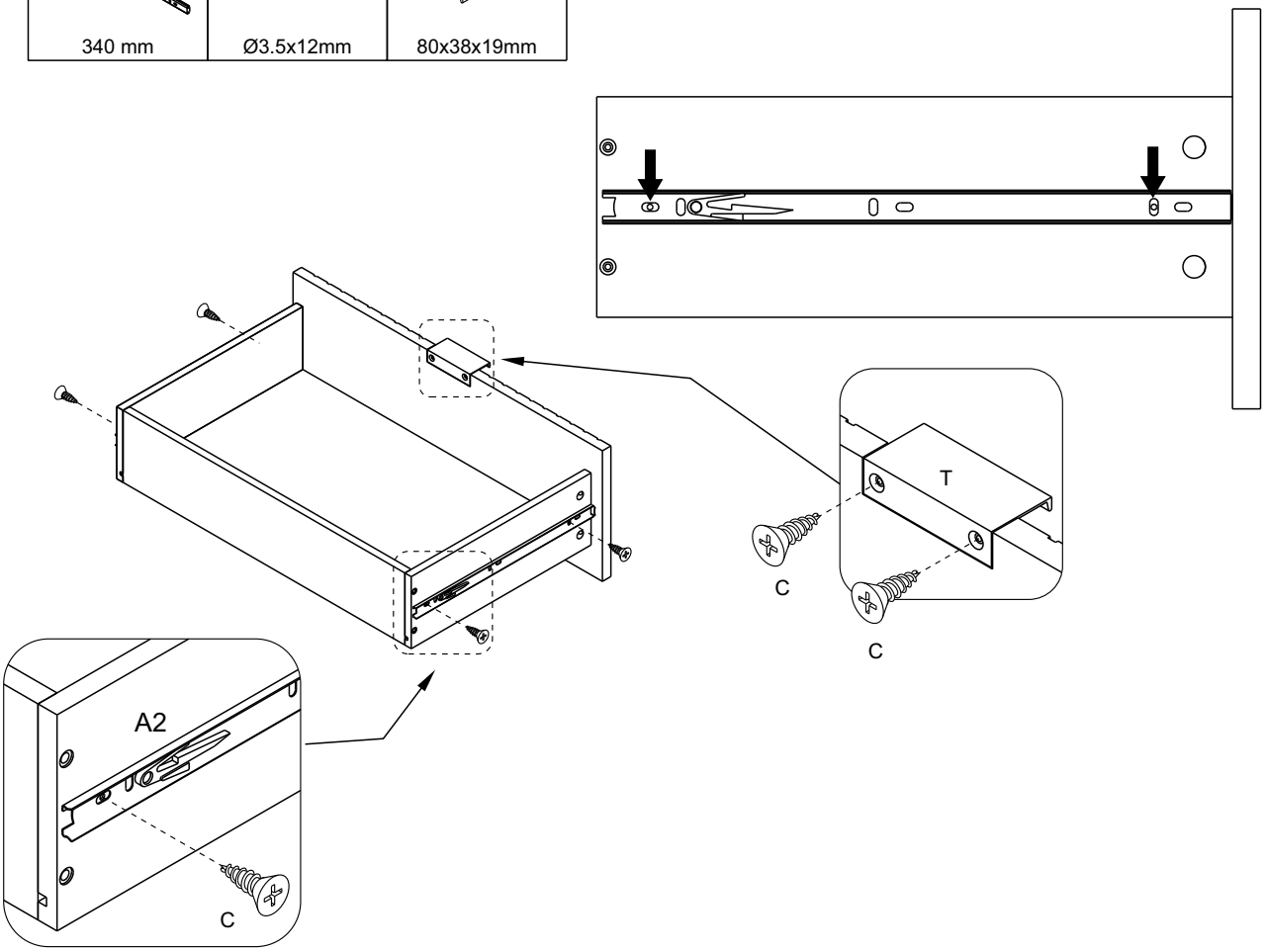

30

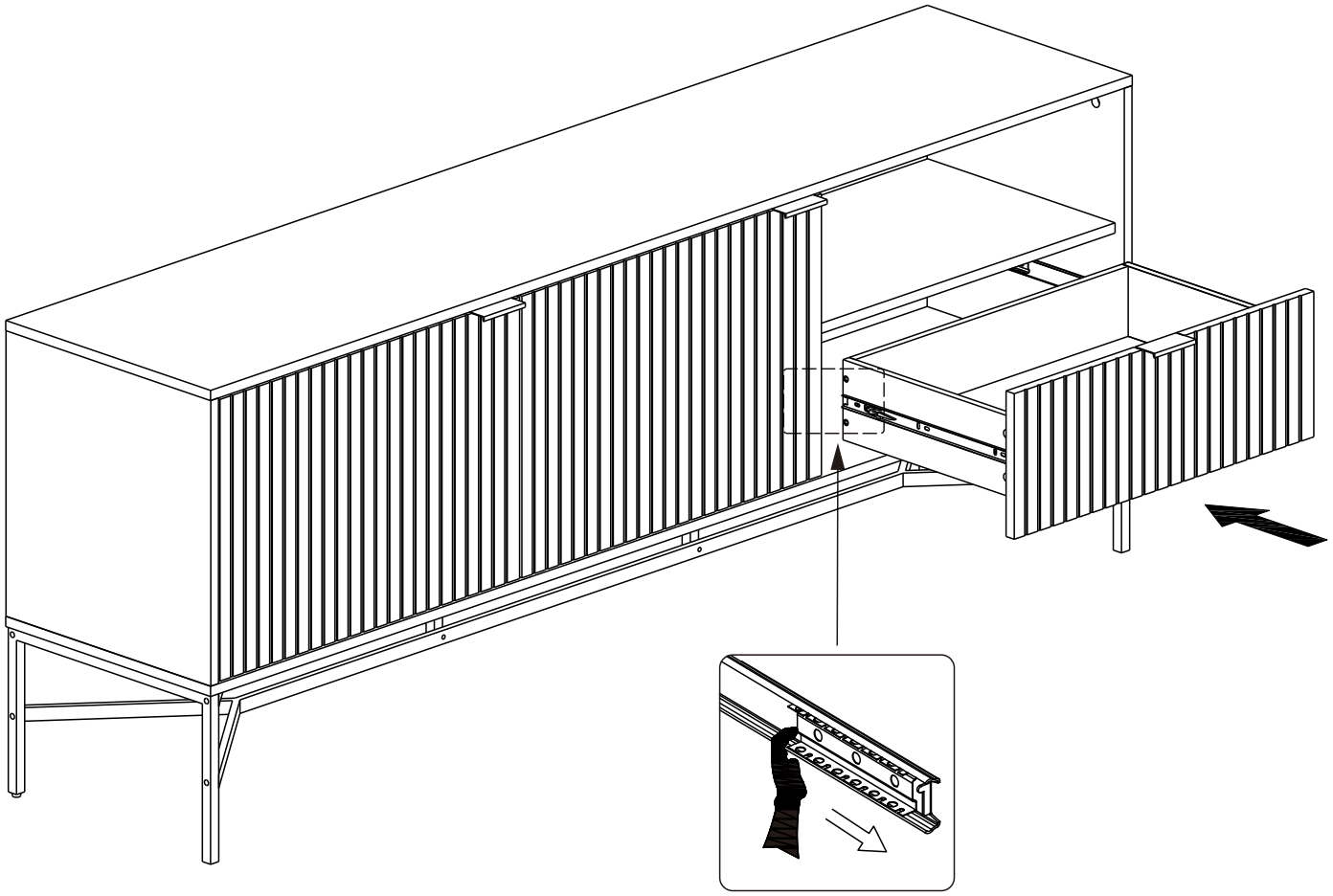

# 31

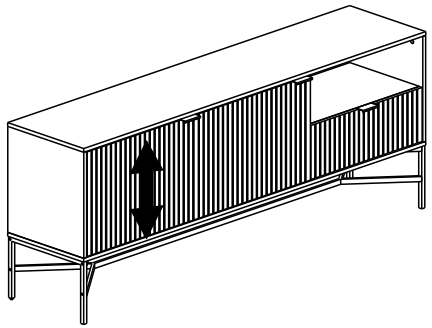

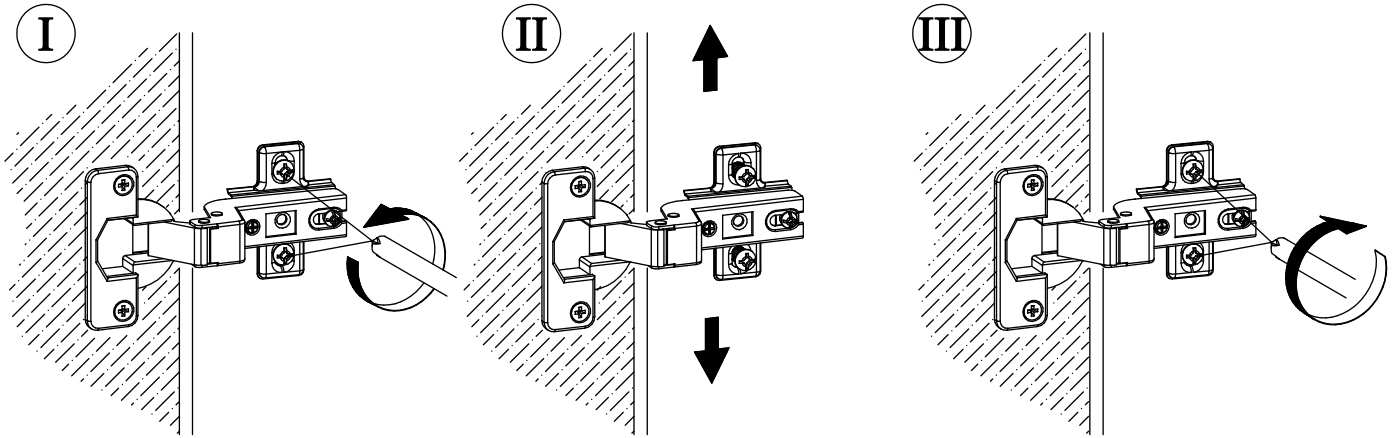


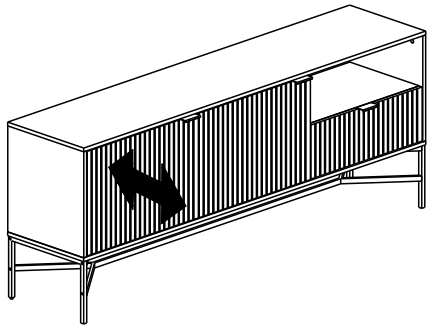

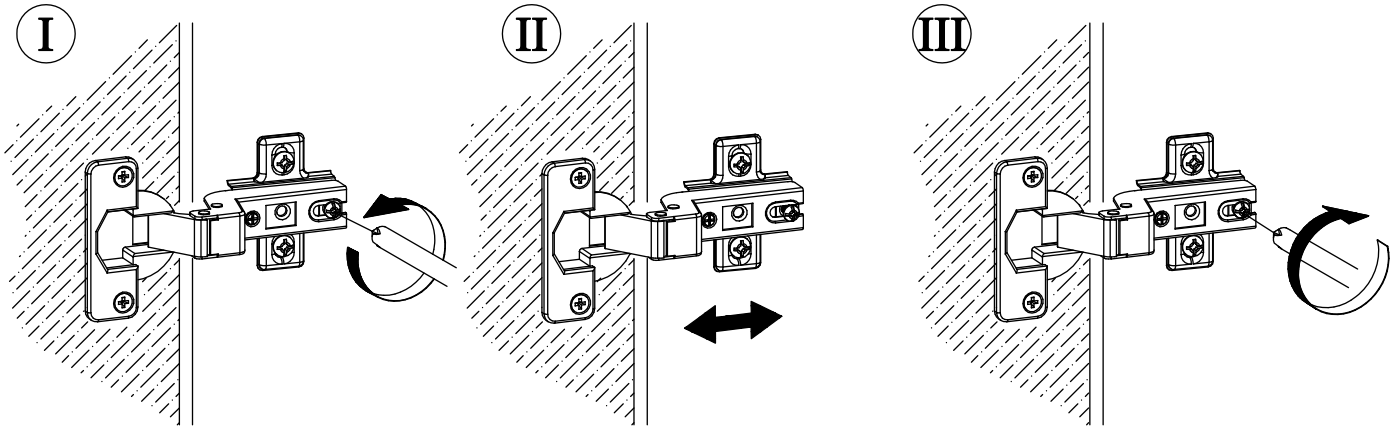


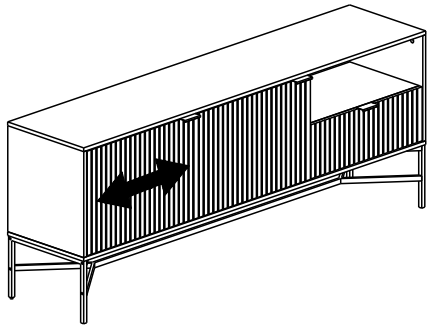

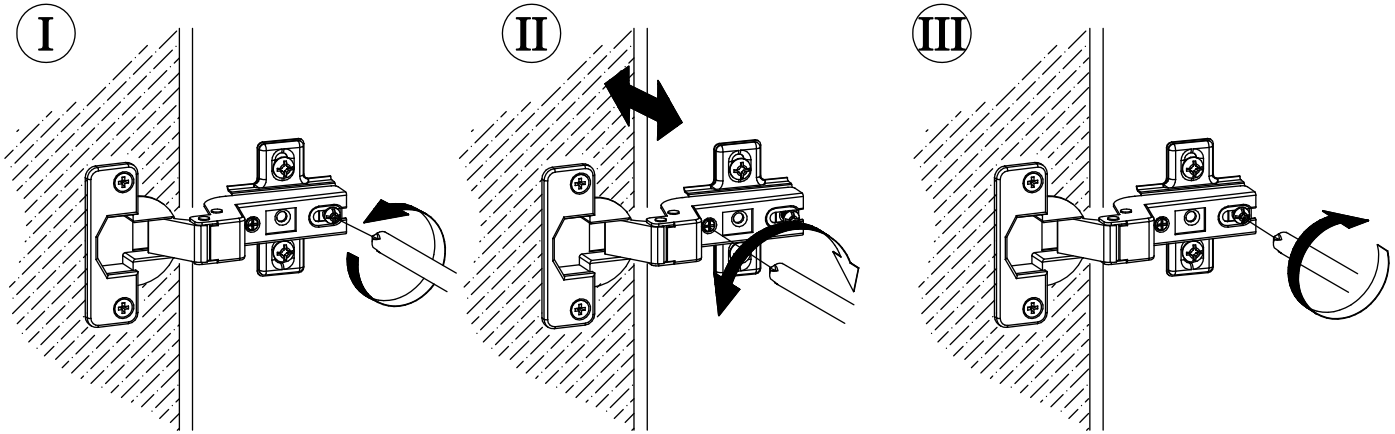
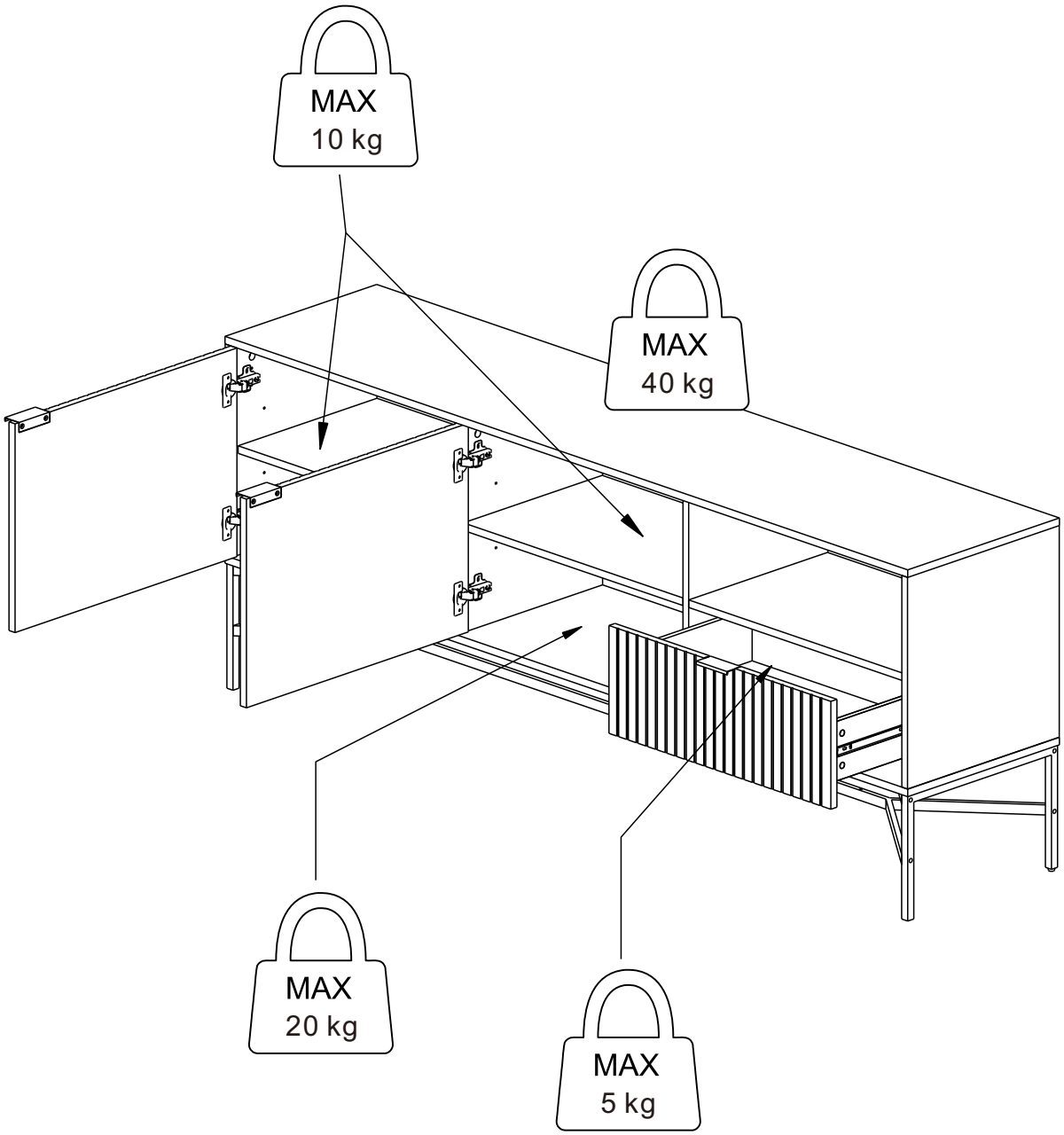
# 32